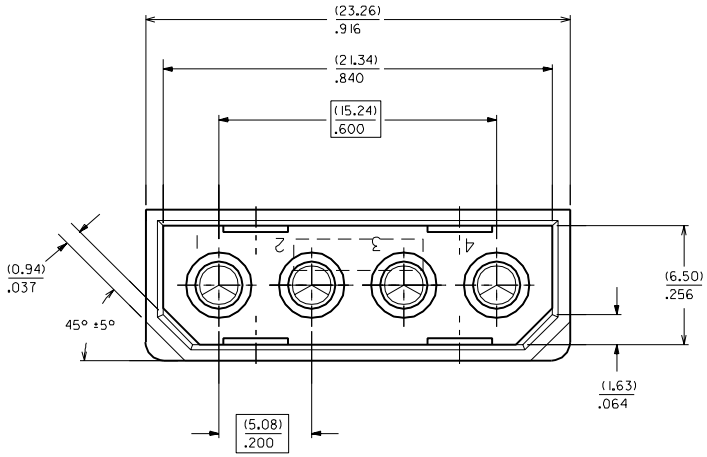

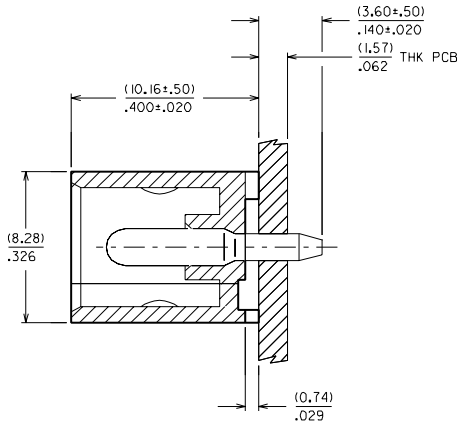

NOTES:

1. PART INTENDED FOR USE WITH PLUG PN: 8981-4P & 8981-4P2
2. PRODUCT SPEC. 8981 APPLIES

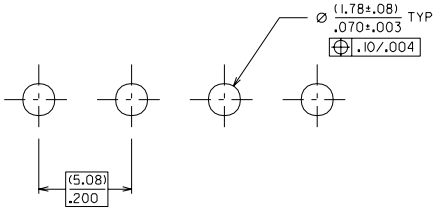

RECOMMENDED P C B HOLE LAYOUT

MATERIAL :

HOUSING : NYLON, TYPE 6/6. 94V-2, COLOR - NATURAL

TERMINAL : PHOSPHOR BRONZE, C51000

PLATING : POSTPLATE (0.00254)/.000100 MIN. TIN/LEAD OVER
(0.00127)/.000050 MIN. NICKEL OVERALL

LTR	REVISION RECORD	ECN	DR	CHK	DATE
J2	REVISED AS PER ECN*	S40497	SEE		940405
J1	REVISED PLATING SPEC.	S30569	JACK	TOH	920310
J	CHG PLTG SPEC ECN*	S2421	TOH	ANG	920310
I	MOD. PER ECN*	S0538	CK	TAY	90/6/11
H	CHG PLTG PER ECN*	S0512	CK	TAY	90/5/25
G	UPDATE ON CAD / ERO *	S110	TAY	CK	15/12/87

REVISE ONLY ON CAD SYSTEM

MATERIAL : SEE ABOVE

FINISH : SEE ABOVE

DRAWN BY 890526 TAY

CHK'D BY 980526 NK

APPR'D BY 890526 AB

SCALE 4 : 1

MOLEX SINGAPORE PTE LTD

SHEET 1 OF 1

GENERAL TOLERANCES ± 0.20/.008

REV J2

DWG. NO.: SDA 8981-4V

TITLE : ASSY, 4 CKT HEADER VERTICAL MOUNT

DWG. NO. SDA 8981-4V

CAD FILE S89814V.DGN

EDP NO: 15-24-4049

DO NOT SCALE DRAWING

THIS DRAWING CONTAINS INFORMATION THAT IS PROPRIETARY TO MOLEX (S) PTE LTD AND SHOULD NOT BE USED WITHOUT WRITTEN PERMISSION